iHFG Standard Components

Room Layout Sheet

Room Name	Overnight Stay - Ensuite, 4m²	RLS Room Code	oves-4-i
		RDS Room Code	oves-4-i

BHS	BIDET HANDSET
COH	COAT HOOK
CSHR	CURTAIN - SHOWER
CTS	CURTAIN TRACK - SHOWER
DHT	DISPENSER - PAPER HAND TOWEL
DS	DISPENSER - SOAP
DTP	DISPENSER - TOILET PAPER
FW	FLOOR WASTE
HWB/IV	HAND WASH BASIN - INTEGRAL VANITY
LS/R	LIGHT SWITCH - ROOM
MR	MIRROR
PO/1S	POWER OUTLET - SPECIAL
S/SHR	SOAP/ SHAMPOO HOLDER - RECESSED
SBK	SPLASHBACK
SHR/1M	SHOWER - SINGLE MIXER
SHRF	SHOWER - FIXED ROSE
SHV	SHELF - VANITY
SK9	TILE COVED SKIRTING
TAP/1M	TAPWARE - SINGLE MIXER
TL	TILE FLOORING
TR/GR	TOWEL RAIL, GRAB RAIL
WBG/20	WASTE BIN - GENERAL, 20 LITRE
WBS	WASTE BIN - SANITARY
WCS	WATER CLOSET - STANDARD
WPF	WALL PAINT FINISH
WT	WALL TILE

NOTE:
1. FALLS IN FLOOR IN SHOWER TO BE 1:60

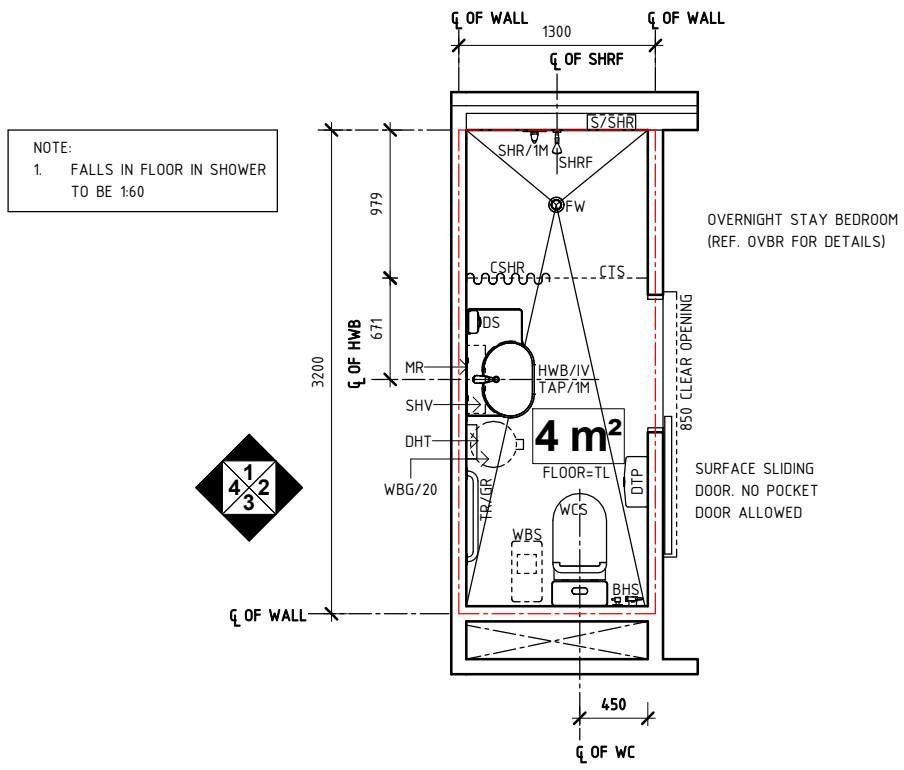

PLAN

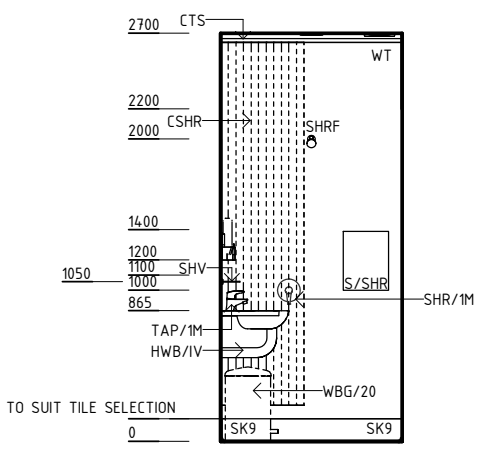

ELEVATION 1

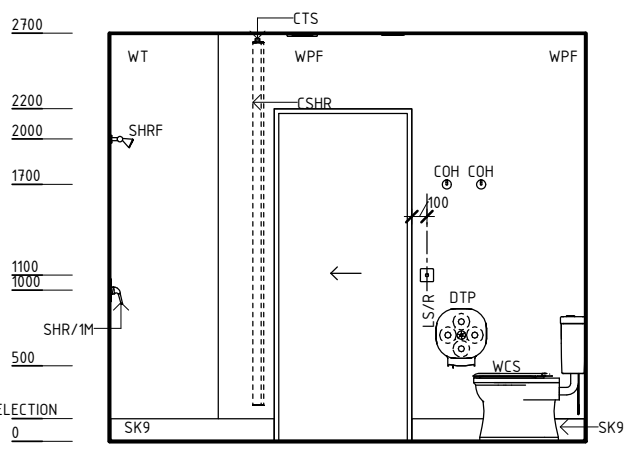

ELEVATION 2

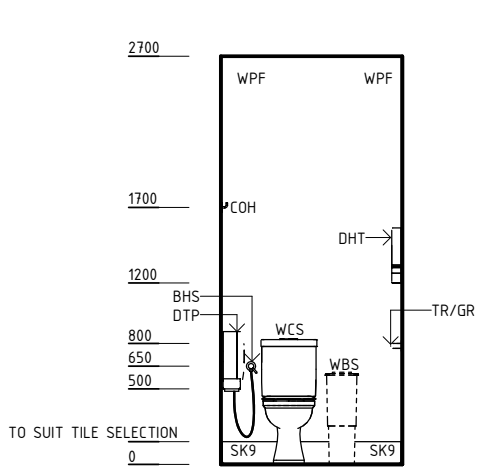

ELEVATION 3

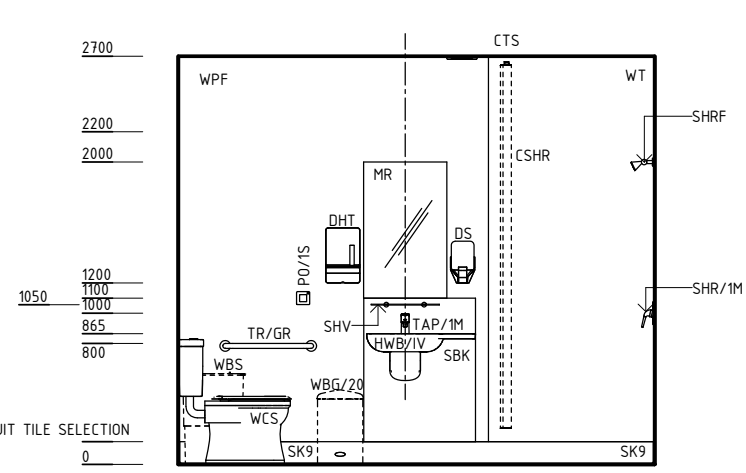

ELEVATION 4

REV	DESCRIPTION	DATE	BY	REV	DESCRIPTION	DATE	BY
1	FIRST ISSUE	19.06.15	NB				
2	GENERAL REVISION	31.08.22	RA				

COMPATIBILITY: iHFG

International Health Facility Guidelines

International Health Facility Guidelines at:
www.healthdesign.com.au/ihfg
Editable version of Standard Components on
Health Facility Briefing System (HFBS) at:
www.healthdesign.com.au ©TAHPI

ISO9001 QUALITY MANAGEMENT SYSTEM

DESIGNED	APPROVED	DATE	SCALE(S)	SHEET
RA	RH	31.08.22	1 : 50	1 OF 2

REVIT FILE NAME	PAPER DRAWING ID	ISSUE
oves-4-i	oves-4-i-1	2

This document is for advisory purpose only

iHFG Standard Components

Room Layout Sheet

Room Name | Overnight Stay - Ensuite, 4m²

RLS Room Code: oves-4-i

RDS Room Code: oves-4-i

GENERAL NOTES:

THIS DRAWING TO BE READ IN CONJUNCTION WITH R.D.S.
(ROOM DATA SHEETS) WHICH TAKES PRECEDENCE.

ALL SERVICES INDICATED ARE INDICATIVE AND SUBJECTED TO
DETAILED PROJECT SPECIFIC ENGINEERING DESIGN.

CEILING LEGEND:

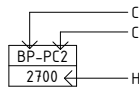

CEILING TYPE
CORNICE TYPE
HEIGHT ABOVE F.F.L.



WATER RESISTANT, DROP IN TILES WITH POWDERCOAT ALUMINIUM CORNICE, SHADOW LINE

TILE CEILING GRID (600 x 600)

GRID LINE

ELECTRICAL LEGEND:

L/LL — LIGHT - LED LIGHT

MECHANICAL LEGEND:

EXHAUST GRILLE

FIRE SERVICES LEGEND:

SMOKE DETECTOR

SPRINKLER

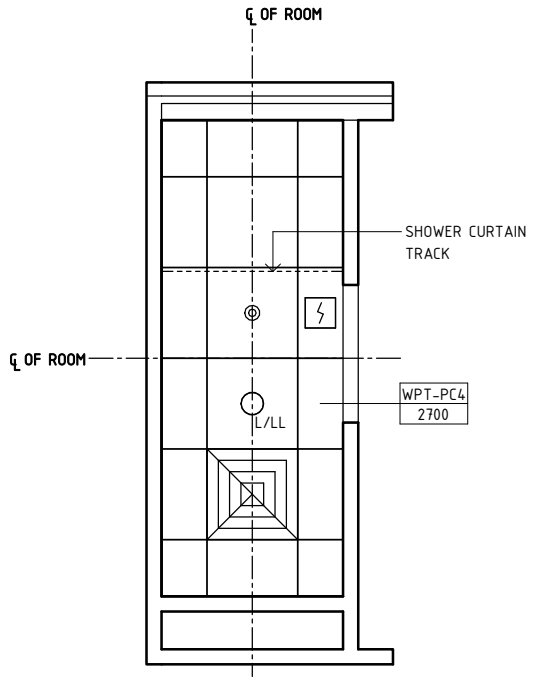

REFLECTED CEILING PLAN

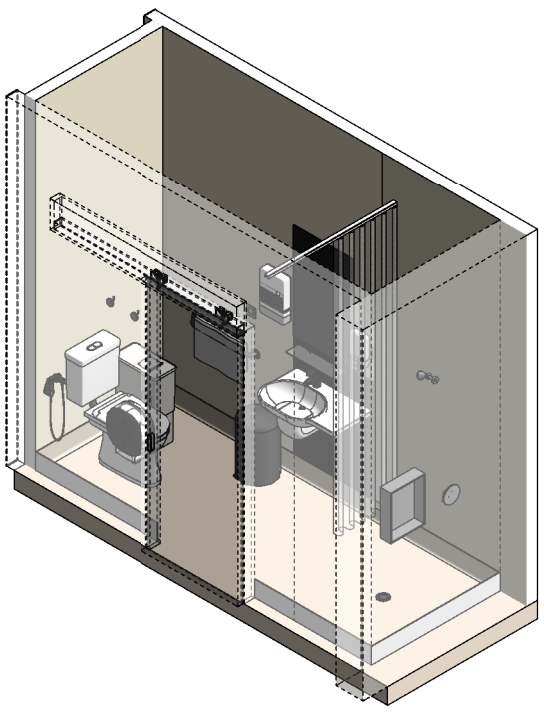

ISOMETRIC VIEW 01

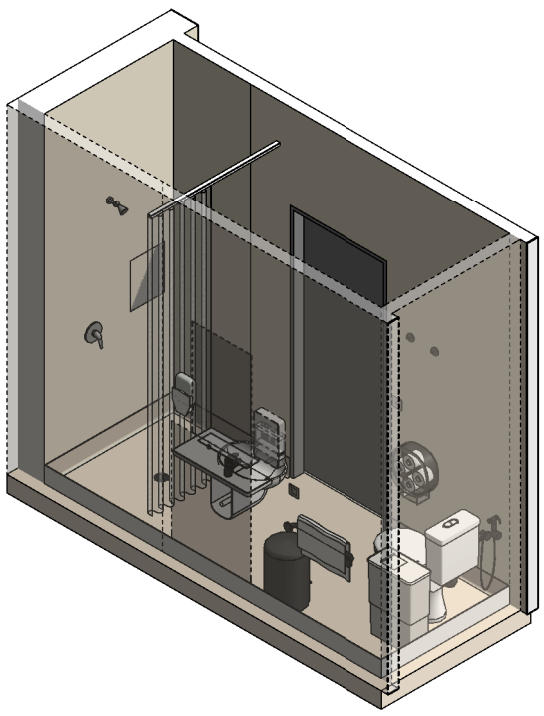

ISOMETRIC VIEW 02

REV	DESCRIPTION	DATE	BY	REV	DESCRIPTION	DATE	BY
1	FIRST ISSUE	19.06.15	NB				
2	GENERAL REVISION	31.08.22	RA				

COMPATIBILITY: iHFG

International Health Facility Guidelines

International Health Facility Guidelines at:
www.healthdesign.com.au/ihfg
Editable version of Standard Components on
Health Facility Briefing System (HFBS) at:
www.healthdesign.com.au ©TAHPI

ISO9001 QUALITY MANAGEMENT SYSTEM

DESIGNED	APPROVED	DATE	SCALE(S)	SHEET
RA	RH	31.08.22	1 : 50	2 OF 2

REVIT FILE NAME	PAPER DRAWING ID	ISSUE
oves-4-i	oves-4-i-2	2

This document is for advisory purpose only