iHFG Standard Components

Room Layout Sheet

Room Name	Procedure Room, 20m²	RLS Room Code	proc-20-i
		RDS Room Code	proc-20-i

BH/PB	BULKHEAD - PLASTERBOARD, PAINT FINISH
BNL	BENCH - LAMINATE
BRCPM	BRACKET - PATIENT MONITOR
BRCS	BRACKET - SHARPS
BRCSB	BRACKET - SUCTION BOTTLE
C	CLOCK
CBD/FAL	CUPBOARD - FULL HEIGHT, ADJUSTABLE SHELVES, LOCKABLE
CBD/UBL	CUPBOARD - UNDER BENCH, LOCKABLE
CBD/WL	CUPBOARD - WALL MOUNTED, LOCKABLE
CMP	COMPUTER
COM/1	COMMUNICATION OUTLET - SINGLE
COM/2	COMMUNICATION OUTLET - DOUBLE
CPS	CURTAIN - PRIVACY SCREEN
CTPS	CURTAIN TRACK - PRIVACY SCREEN
DDG	DISPENSER - DISPOSABLE GLOVES
DFP	DOOR AND DOOR FRAME PROTECTION
DHS	DISPENSER - HAND SANITISER
DHT	DISPENSER - PAPER HAND TOWEL
DSA	DISPENSER - SOAP, ANTISEPTIC
EC	EMERGENCY CALL
FR/DRS	FRIDGE - DRUG, SMALL
HWB/A	HAND WASH BASIN - TYPE 'A'
IVS	IV STAND - MOBILE
L/PC	LIGHT - PROCEDURE, CEILING MOUNTED
LS/R	LIGHT SWITCH - ROOM
MA	MEDICAL AIR
MON/C	MONITOR - CARDIAC
N2O	NITROUS OXIDE
O2	OXYGEN
PC	PATIENT CALL
PCH	PATIENT CALL HANDSET
PO/1	POWER OUTLET - SINGLE
PO/1E	POWER OUTLET - EMERGENCY, SINGLE
PO/2	POWER OUTLET - DOUBLE
PO/2E	POWER OUTLET - EMERGENCY, DOUBLE
PU/IN1	PUMP - INFUSION, SINGLE
S	SUCTION
SAC	STAFF ASSIST CALL
SB	SUCTION BOTTLE
SBIN	SHARPS BIN
SBK	SPLASHBACK
SC	SCAVENGE OUTLET
SK4	FLOOR VINYL COVED SKIRTING
SP	SERVICES PANEL
STAM	STOOL - ADJUSTABLE, MOBILE
STCH	STRETCHER
T/PR	TROLLEY - PROCEDURE
TAP/ST	TAPWARE - SENSOR TAP
TP/HH	TELEPHONE - HANDSET, HANDSFREE

V1	VINYL FLOORING, STANDARD SLIP RESISTANT
V6	VINYL FLOORING, NON SLIP - TEXTURED
WBC/50	WASTE BIN - CLINICAL, 50 LITRE
WBG/20	WASTE BIN - GENERAL, 20 LITRE
WPF	WALL PAINT FINISH
WPP	WALL PROTECTION PANEL
WV	WALL VINYL

SERVICES PANEL

1 X COM/2
3 X PO/1
3 X PO/1E
1 X N2O
2 X O2
1 X MA
1 X SC
2 X S
2 x SAD
1 X PCH
1 X PC
1 X EC
1 X SAC

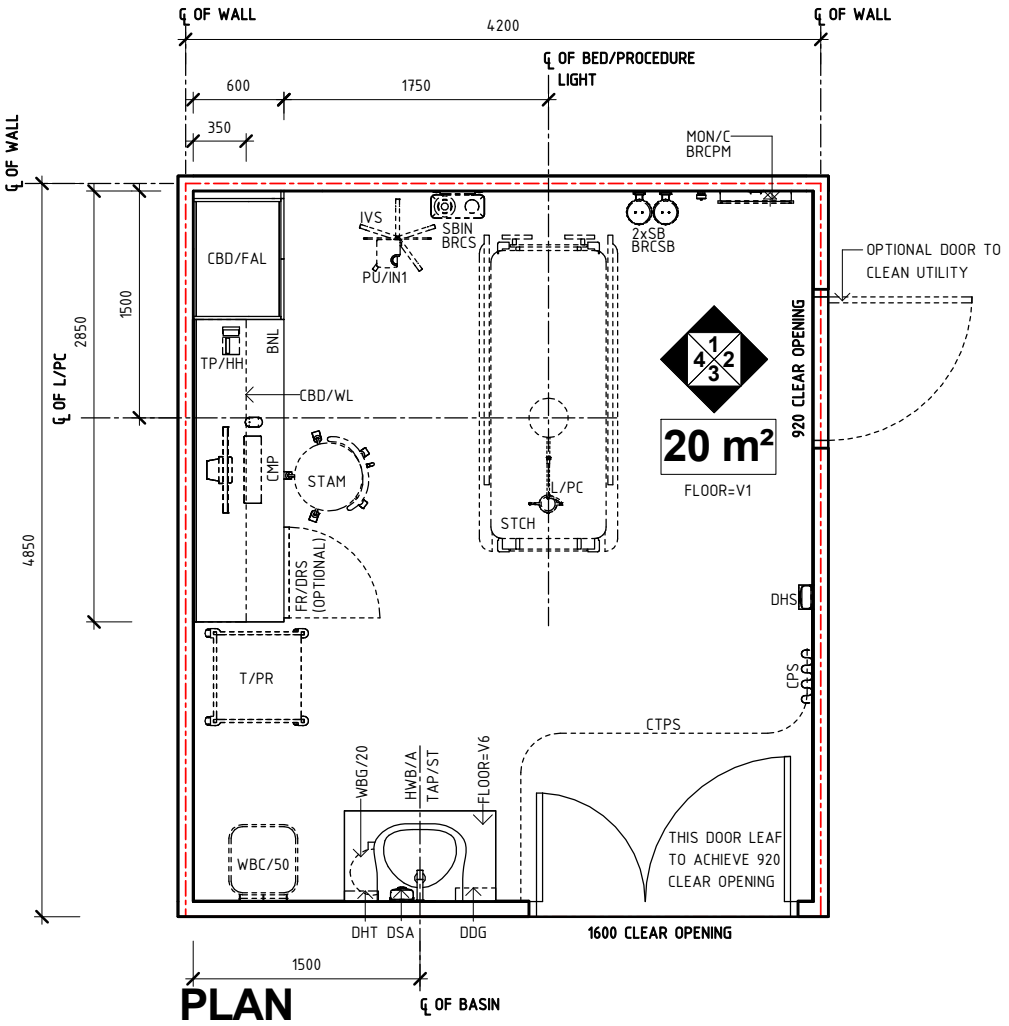

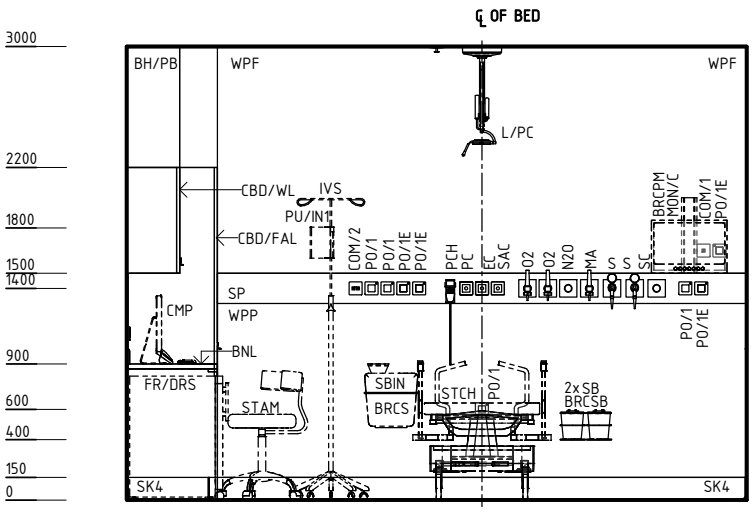

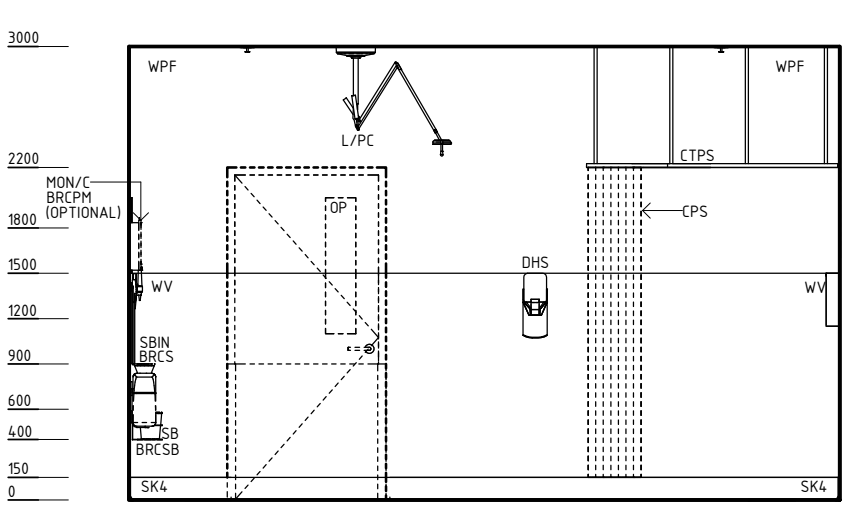

ELEVATION 1

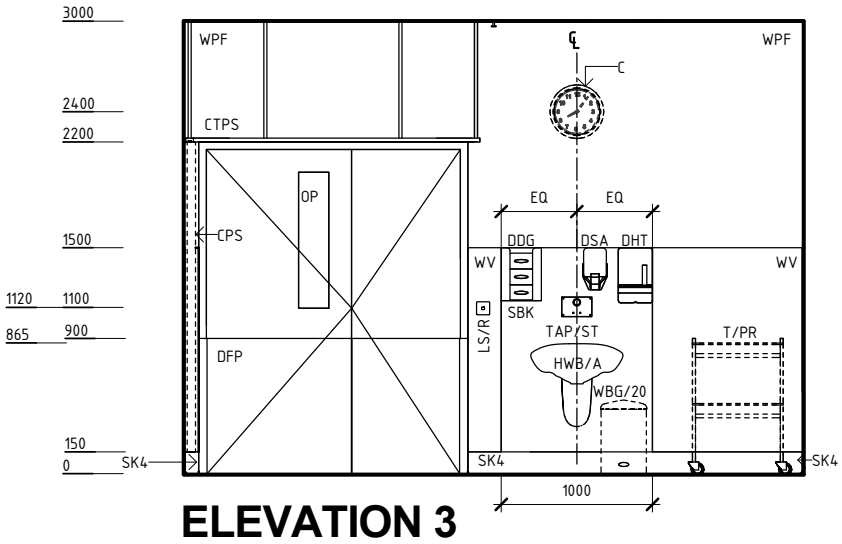

ELEVATION 2

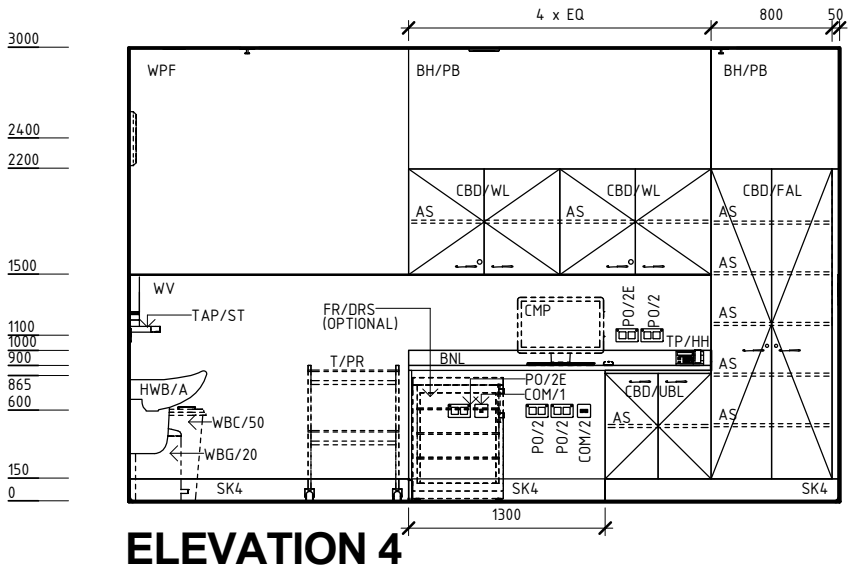

ELEVATION 3

ELEVATION 4

REV	DESCRIPTION	DATE	BY	REV	DESCRIPTION	DATE	BY
1	FIRST ISSUE	24.10.10	CC	4	GENERAL REVISION	31.10.22	RA
2	GENERAL REVISION	30.08.11	SK				
3	GENERAL REVISION	31.10.12	CT				

COMPATIBILITY: iHFG

DESIGNED	APPROVED	DATE	SCALE(S)	SHEET
RA	RH	31.10.22	1 : 50	1 OF 3

REVIT FILE NAME	PAPER DRAWING ID	ISSUE
proc-20-i	proc-20-i-1	4

iHFG International Health Facility Guidelines

International Health Facility Guidelines at:
www.healthdesign.com.au/ihfg
Editable version of Standard Components on Health Facility Briefing System (HFBS) at:
www.healthdesign.com.au ©TAHPI

ISO9001 QUALITY MANAGEMENT SYSTEM

This document is for advisory purpose only

iHFG Standard Components

Room Layout Sheet

Room Name	Procedure Room, 20m²	RLS Room Code	proc-20-i
		RDS Room Code	proc-20-i

GENERAL NOTES:

THIS DRAWING TO BE READ IN CONJUNCTION WITH R.D.S.
(ROOM DATA SHEETS) WHICH TAKES PRECEDENCE.

ALL SERVICES INDICATED ARE INDICATIVE AND SUBJECTED TO
DETAILED PROJECT SPECIFIC ENGINEERING DESIGN.

CEILING LEGEND:

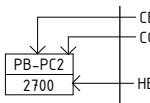

CEILING TYPE
CORNICE TYPE
HEIGHT ABOVE F.F.L.

BH/PB	BULKHEAD - PLASTERBOARD, PAINT FINISH
PB-PC3	PLASTERBOARD FLUSH SET CEILING, PAINT FINISH WITH PLASTERBOARD SQUARE SET CORNICE
—·—	GRID LINE

ELECTRICAL LEGEND:

L/CC	LIGHT - COLOUR CORRECTED
L/DR	LIGHT - DOWNLIGHT, RECESSED

MECHANICAL LEGEND:

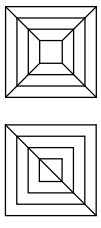

SUPPLY AIR GRILLE

RETURN AIR GRILLE

FIRE SERVICES LEGEND:

	SMOKE DETECTOR
	SPRINKLER

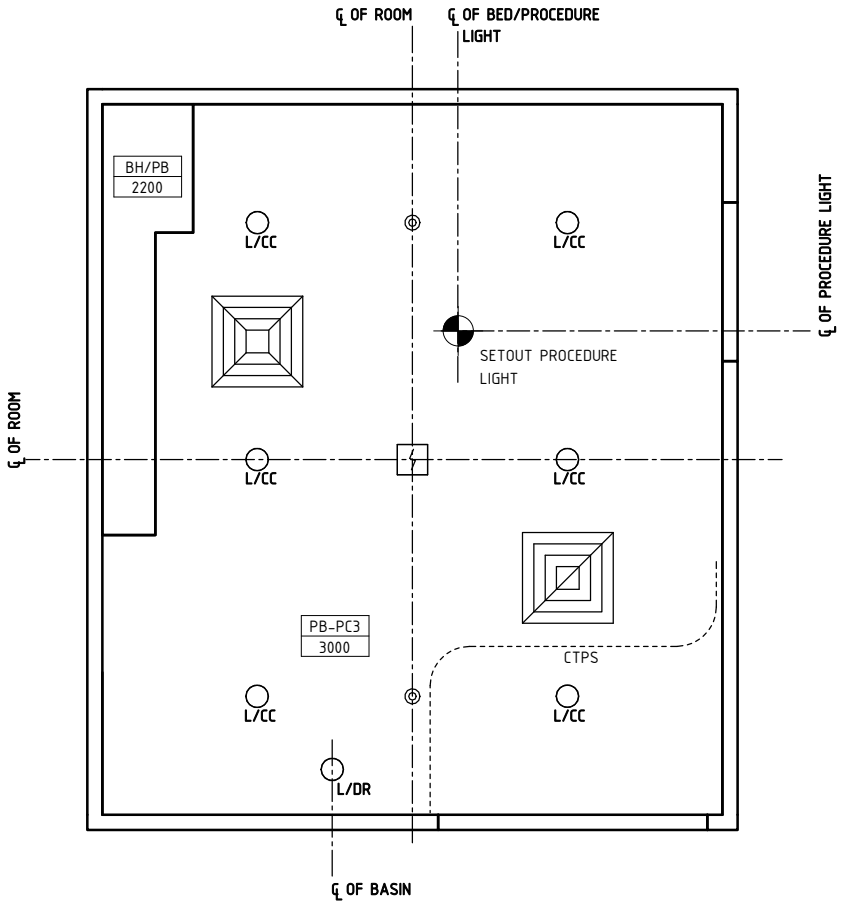

REFLECTED CEILING PLAN

REV	DESCRIPTION	DATE	BY	REV	DESCRIPTION	DATE	BY
1	FIRST ISSUE	24.10.10	CC	4	GENERAL REVISION	31.10.22	RA
2	GENERAL REVISION	30.08.11	SK				
3	GENERAL REVISION	31.10.12	CT				

COMPATIBILITY: iHFG

International Health Facility Guidelines

International Health Facility Guidelines at:
www.healthdesign.com.au/ihfg
Editable version of Standard Components on
Health Facility Briefing System (HFBS) at:
www.healthdesign.com.au ©TAHPI

ISO9001 QUALITY MANAGEMENT SYSTEM

DESIGNED	APPROVED	DATE	SCALE(S)	SHEET
RA	RH	31.10.22	1 : 50	2 OF 3

REVIT FILE NAME	PAPER DRAWING ID	ISSUE
proc-20-i	proc-20-i-2	4

This document is for advisory purpose only

iHFG Standard Components

Room Layout Sheet

Room Name	Procedure Room, 20m²	RLS Room Code	proc-20-i
		RDS Room Code	proc-20-i

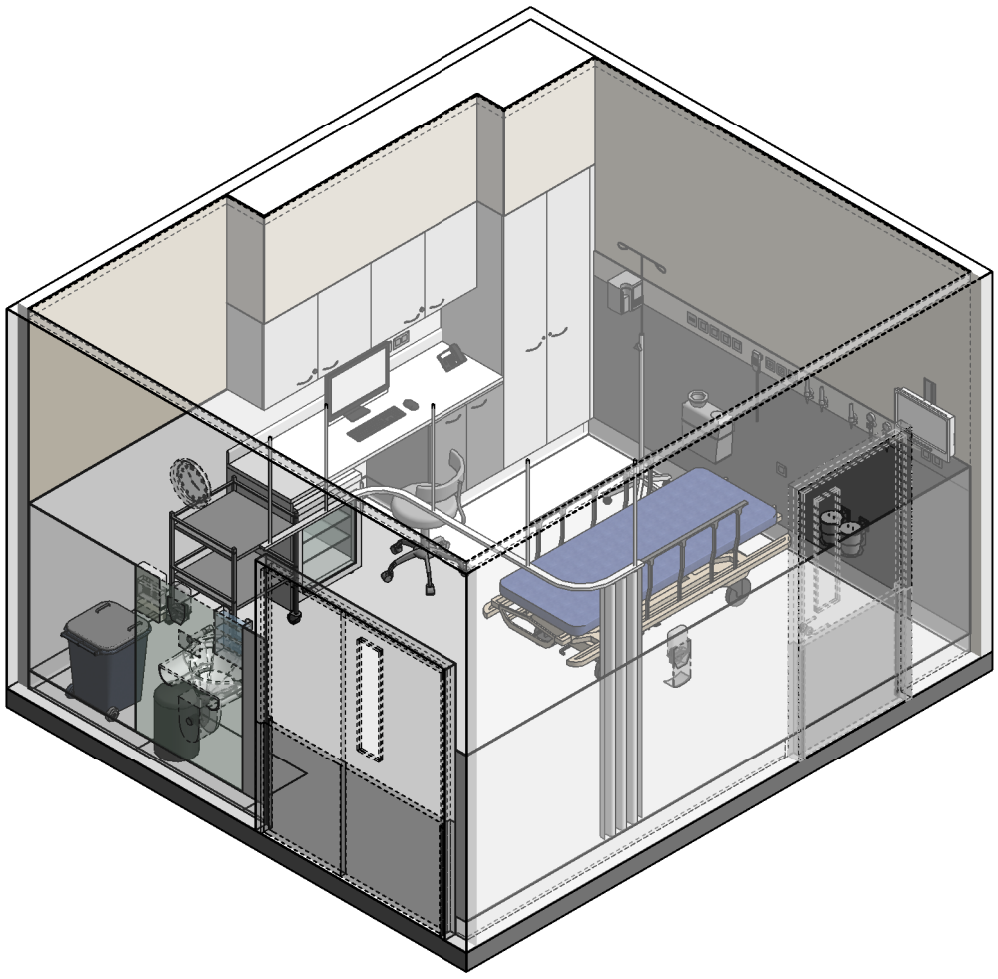

ISOMETRIC VIEW 1

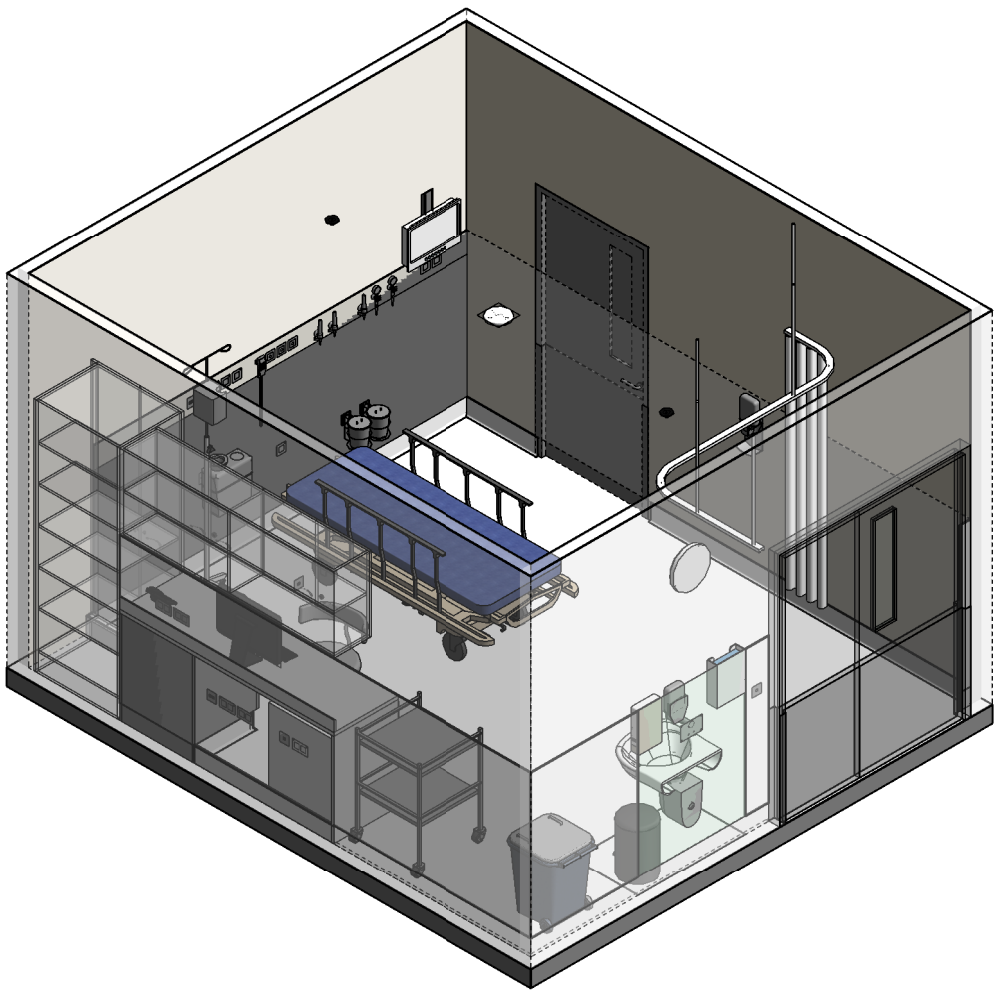

ISOMETRIC VIEW 2

REV	DESCRIPTION	DATE	BY	REV	DESCRIPTION	DATE	BY
1	FIRST ISSUE	24.10.10	CC	4	GENERAL REVISION	31.10.22	RA
2	GENERAL REVISION	30.08.11	SK				
3	GENERAL REVISION	31.10.12	CT				

COMPATIBILITY: iHFG

International Health Facility Guidelines

International Health Facility Guidelines at:
www.healthdesign.com.au/ihfg
Editable version of Standard Components on
Health Facility Briefing System (HFBS) at:
www.healthdesign.com.au ©TAHPI

ISO9001 QUALITY MANAGEMENT SYSTEM

DESIGNED	APPROVED	DATE	SCALE(S)	SHEET
RA	RH	31.10.22		3 OF 3
REVIT FILE NAME: proc-20-i		PAPER DRAWING ID: proc-20-i-3		ISSUE: 4

This document is for advisory purpose only